USB Flash Disk Control Chip CH331

Datasheet
Version: 1B
http://wch.cn

1. Overview

CH331 is a control chip for a small-capacity USB flash disk. As long as a serial memory chip is added, a small-capacity USB flash disk of 2KB to 4MB can be realized.

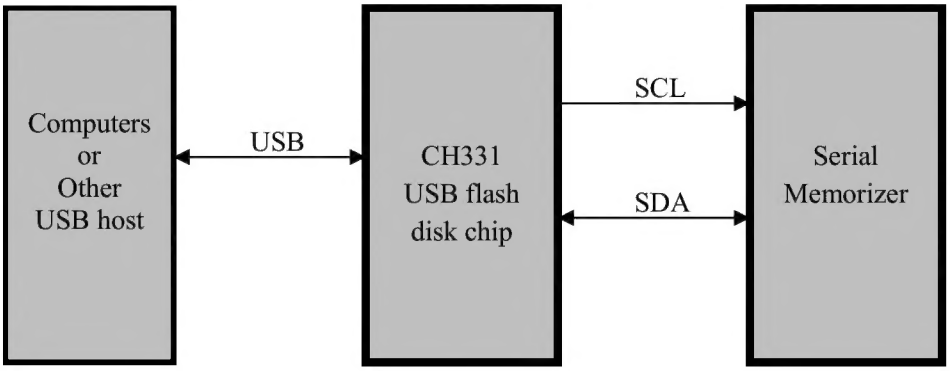

2. Features

- Full-speed USB device interface, compatible with USB V2.0; only crystal and capacitors are required for peripheral components.
- Only 24CXX two-line serial port EEPROM memory or FRAM ferroelectric memory is externally added to realize USB flash disk.
- Supporting self-definition of USB flash disk manufacturer name, capacity and serial number, etc. in external storage.
- In conformity to related USB specification, supporting USB flash disk guide.
- Supporting WINDOWS 98/ME/2000/XP/Vista operating system; no drive program is needed except for WINDOWS 98.
- Support WINDOWS normal formatting, and providing special formatting tools to optimize disk space utilization.
- Support file mode; the entire memory can be simulated as a file in the USB flash disk for IC card reader.
- Small-sized SSOP-20 lead-free package, and compatible with RoHS.

3. Package

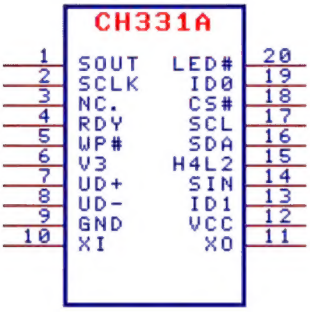

Package	Width of plastic		Pitch of pin		Instruction of Package	Ordering information
SSOP-20	5.30mm	209mil	0.65mm	25mil	Ultra-small 20-pin patch	CH331A

4. Pins

Pin No.	Pin Name	Type	Description
12	VCC	Power	Positive power input, an external 0.1uF power decoupling capacitor is required
9	GND	Power	Common ground, shall be directly connected to the ground wire of the USB bus
6	V3	Power	Connected to the VCC to input external power at the supply voltage of 3.3V Connected to an external 0.01uF decoupling capacitor at 5V supply voltage
10	XI	Input	Crystal oscillator input, required to be connected to an external crystal and oscillation capacitor
11	XO	Output	Reversed output of the crystal oscillator, required to be connected to an external crystal and oscillation capacitor
7	UD+	USB signal	Directly connected to the D+data line of USB bus
8	UD-	USB signal	Directly connected to the D-data line of USB bus
20	LED#	Output	Drive LED to serve as the status indication output, active low
15	H4L2	Input	It must be connected to low level
4	RDY	Input	Memory ready status input, active high, with built-in pull-up resistor
5	WP#	Input	Data write protection status input, active low, with built-in pull-up resistor
18	CS#	Output	Memory write operation status output, active low
17	SCL	Open-drain output	Clock output of two-wire serial port, with built-in pull-up resistor
16	SDA	Open-drain output and input	Data output and input of two-wire serial port, with built-in pull-up resistor
14	SIN	Input	Memory simulation mode set input, with built-in pull-up resistor, File mode when at low level, disk mode when at high level
13	ID1	Input	Memory model selection input, with built-in pull-up resistor, 24C16 when at low level; ID0 is active when ID1 is at high level
19	ID0	Input	Memory model selection input, with built-in pull-up resistor, 24C256 when at low level, 24C64 when at high level
2	SCLK	Input	Reserved I/O pins, can be controlled by the WINDOWS application program
1	SOUT	Output	Reserved I/O pins, can be controlled by the WINDOWS application program
3	NC.	Output	Reserved. Do not conntect.

5. Functional Specification

5.1. Hardware

The CH331 chip has the built-in USB pull-up resistors, and the UD+ and UD- pins shall be directly connected to the USB bus.

The CH331 chip has the built-in power-on reset circuit.

When the CH331 works normally, it is needed to be provided with a 12MHz clock signal to the XI pin from the external. Generally, the clock signal is generated by the built-in inverter of CH331 through the crystal stable frequency oscillator. The peripheral circuit only needs to be connected to a 12MHz crystal between the XI and XO pins, and connected to the oscillation capacitor to the ground for XI and XO pins respectively.

When CH331 works at 5V power, V3 pin shall be connected with a power decoupling capacitor with capacity of about 0.01uF.

The LED# pin can drive a LED connected to the current-limiting resistor in series. If the LED is off, it means that it has not been configured or working. If the LED emits dim light, it means that the USB configuration is completed, but the USB transmission is not currently being performed. If the LED is normally on, it means that the USB transmission is in progress.

The RDY pin is used to dynamically detect whether the external memory is ready. When CH331 is used for IC card reader (data collector), if the memory is not ready, then RDY shall be set to low level. When the memory is ready, RDY shall be restored to high level.

The WP# pin is used to set the U disk data write protection, and this pin is only checked once after power-on. When write protection is needed, the WP# pin can be set to low level before the USB flash disk is powered on, so as to prevent the USB flash disk data from being deleted.

The CS# pin is the output pin of the memory write operation status. The default is high level. During CH331 erasing and writing external memory, this pin outputs a low level.

The SCL pin and SDA pin are used for a two-wire serial port, which can be directly connected to 24CXX series EEPROM or FRAM serial non-volatile memory compatible with I2C interface.

The SIN pin is used to select the memory simulation mode. This pin is only tested once after power-on. When SIN is at high level, it is in disk mode (i.e., ordinary USB flash disk mode), i.e., the entire external memory is used as disk space, and the file system is implemented in the external memory. It supports USB flash disk formatting. When SIN is at low level, it is the file mode, i.e., the file system is implemented internally by CH331, and the entire external memory is used as a file in the USB flash disk. The computer reads and writes this file, i.e., reading and writing the entire external memory. This function can be used for the IC card reader.

Both the ID1 pin and ID0 pin are used to select the memory model, and they are divided into 3 groups, each with a default model. When ID1 is at low level, select the first group, the model is 24C16, and the capacity is 2KB. After the capacity is specified in the configuration information, it can support 24C02, 24C04, and 24C08. When ID1 is at high level and ID0 is at high level, select the second group, the model is 24C64, the capacity is 8KB, and the capacity is specified in the configuration information to support 24C32. When ID1 is at high level and ID0 is at low level, select the third group. The model is 24C256 and the capacity is 32KB. After the capacity is specified in the configuration information, it can support 24C128, 24C512, 24C1024, 24C2048 and 24C4096.

Since CH331 complies with relevant USB specifications, it can be automatically recognized for newer computer operating systems, such as Windows ME/2000/XP/Vista, and no drive program is required.

5.2. Configuration

CH331 supports customizing various common configuration information in external memory. The configuration data is defined in the first sector of the external memory, and the linear address is the memory location from 0000H to 01FFH.

The data in this section with the H suffix is represented in hexadecimal, and the characters in the quotation marks are ASCII character strings.

Address	Description	Default data
00H-07H	Configuration data valid flag	'$CH33x',A5H,21H
08H-0FH	Reserved	00H
10H	Configuration data valid flag	53H
11H	Configuration data valid flag	3BH
12H	System configuration information Bit0: It must be 0 Bit1: Product information at address 40H-7FH, 0-invalid, 1-valid Bit2: Supports USB device auto-suspension, 0-disabled, 1-enabled Bit 3: Analog device type, 0-disk, 1-CD Bit4: Media removal feature, 0-unremovable, 1-removable Bit5: Purpose of the first sector of the memory, 0-USB flash disk data, 1-configuration data Bit6: Write protection of the first sector of the memory, 0-read and write, 1-read only Bit7: Write protection of the entire U disk data, 0-read and write, 1-read only	10H (10H as internal value by default, equal to 70H configured externally)
13H	Hardware configuration information Bit0: Media detection, 0-automatically through RDY pin, 1-no detection Bit1: It must be 0 Bit2: It must be 0 Bit3: Memory model selection, 0-first group, 1-judgment according to bit 4 Bit4: Memory model selection, 0-second group, 1-third group Bit5: It must be 0 Bit6: It must be 0 Bit7: Memory simulation mode, 0-disk mode, 1-file mode	00H
14H-15H	Manufacturer ID	4348H
16H-17H	Product ID	5533H
18H-19H	Version ID	0100H
1AH	Subcategory of the transport protocol interface	06H
1BH	Reserved	00H
1CH-1DH	USB flash disk capacity, maximum sector number (total number of sectors minus 1)	0003H
1EH-1FH	Reserved	0000H

20H-2BH	Product serial number character string, a total of 12 hexadecimal ASCII characters	'025A84730668'
2CH-3FH	Reserved	00H
The following data only works when the bit1 of the system configuration information is 1. Refer to the INQUIRY command in the SCSI specification		
40H	USB flash disk device type; 00H means disk, 05H means CD	00H
41H	USB flash disk media characteristics, 00H means unremovable, 80H means removable	80H
42H-47H	Additional data	02H,02H,1FH,00H,00H,00H
48H-4FH	USB flash disk manufacturer name character string	' wch.cn '
50H-5FH	USB flash disk product character string	' USB Mini-Disk '
60H-63H	USB flash disk product version character string	'1.0 '
64H-65H	Product information data valid flag of address 40H-7FH	A5H,5AH
66H-7FH	Reserved	00H
80H-1FFH	Reserved	00H

6. Parameters

6.1. Absolute Maximum Value

Critical value or exceeding the absolute maximum value may cause the chip to work abnormally or even be damaged.

Name	Parameter description	Min.	Max.	Unit
TA	Ambient temperature during operation	-30	80	℃
TS	Ambient temperature during storage	-55	125	℃
VCC	Supply voltage (VCC connects to power, GND to ground)	-0.5	6.5	V
VIO	Voltage on the input or output pins	-0.5	VCC+0.5	V

6.2. Electrical Parameters

Test Conditions: TA=25℃, VCC=5V, Excluding the Pins Connected to the USB Bus

Name	Parameter description	Min.	Typ.	Max.	Unit
VCC	Supply voltage (V3 pin is not connected to VCC pin)	4.5	5	5.3	V
ICC	Total supply current during working		13	30	mA
ISLP	Total supply current during USB suspension		0.3		mA
VIL	Low level input voltage	-0.5		0.7	V
VIH	High level input voltage	2.0		VCC+0.5	V
VOL	Low level output voltage (4mA draw current)			0.5	V
VOH	High level output voltage (4mA output current) (Only 100uA output current during chip reset)	VCC-0.5			V
IUP	Input current at the input terminal of built-in pull-up resistor	40	80	160	uA
VR	Voltage threshold of power-on reset		2.7		V

6.3. Timing Parameters

Test Conditions: TA=25℃, VCC=5V

Name	Parameter description	Min.	Typ.	Max.	Unit
FCLK	Input clock signal frequency of the XI pin	11.98	12.00	12.02	MHz
TPR	Reset time of power-on		20	50	mS

7. Applications

7.1. Small-Capacity USB Flash Disk (Figure below)

The figure below shows the small-capacity USB flash disk realized by CH331.

The WP# pin and SIN pin of CH331 can be set as required, and the ID1 pin and ID0 pin are set according to the memory capacity. The model of the memory U2 in the figure is 24C256, so the ID0 pin shall be connected to a low level. The total capacity of the USB flash disk is 32KB, and the available space after being formatted by WINDOWS is only 12KB. The maximum available space is 30.5KB after formatting with the special formatting tool FORMATUD.EXE.

P 1 is a USB port. The USB bus includes a pair of 5V power lines and a pair of data signal lines. Generally, the +5V power line is red, the ground line is black, the D+ signal line is green, and the D- signal line is white.

The capacity of C3 is 4700pF to 0.02μF, which is used for decoupling the internal power node of CH331, and the capacity of C4 is 0.1μF, which is used for decoupling of external power supply. Crystal X1, capacitors C1 and C2 are used in the clock oscillation circuit. X2 is a quartz crystal with a frequency of 12MHz, and C1 and C2 are monolithic or high-frequency ceramic capacitors with a capacity of 15pF～30pF.

It shall be noticed that the decoupling capacitors C3 and C4 shall be as close as possible to the connected pins of CH331 when the printed circuit board PCB is designed; the D+ and D- signal lines shall be close to parallel wiring, and ground wire or covered copper shall be provided on both sides to reduce the external signal interference; the length of the signal lines related to the XI and XO pins shall be shortened as far as possible to reduce the high-frequency interference. The ground wire or covered copper shall surround the relevant components.

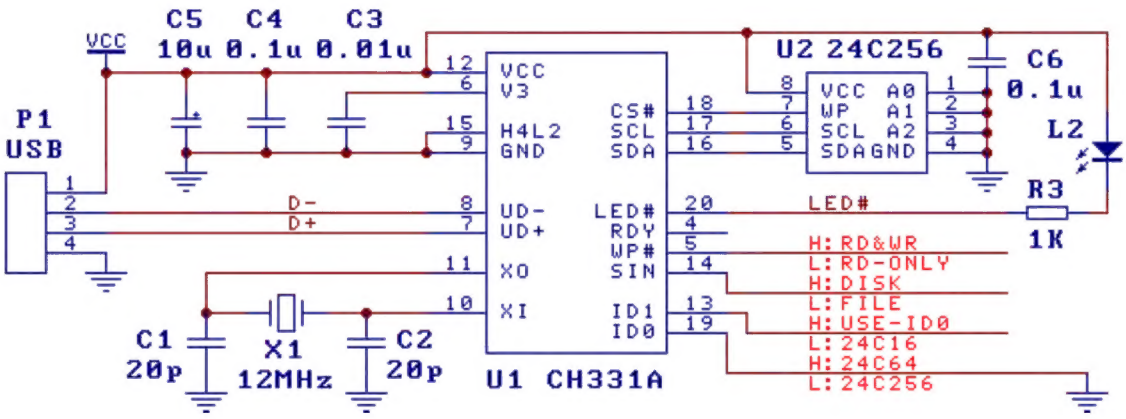

7.2. File Mode (Figure Below)

The model of the memory U7 in the figure is 24C16, with the total capacity of 2KB, and the ID1 pin of CH331 is connected to low level.

After 24C16 is used as a memory, the available space after formatting in disk mode is only 512 bytes, so it

can only be used for some special purposes. For example, the USB flash disk does not need to be formatted for USB booting of computer, and the boot code can be up to 2KB.

In the figure, the SIN pin of CH331 is at low level, so the USB flash disk will work in file mode. In the file mode, the USB flash disk does not support formatting, and files cannot be deleted. There is only one file in the USB flash disk. The file name is USBFILE1.BIN. The file length is the same as the total storage capacity of the memory, i.e., 2KB. The computer application program reads and writes the file. Is to read and write the entire 24C16 memory.
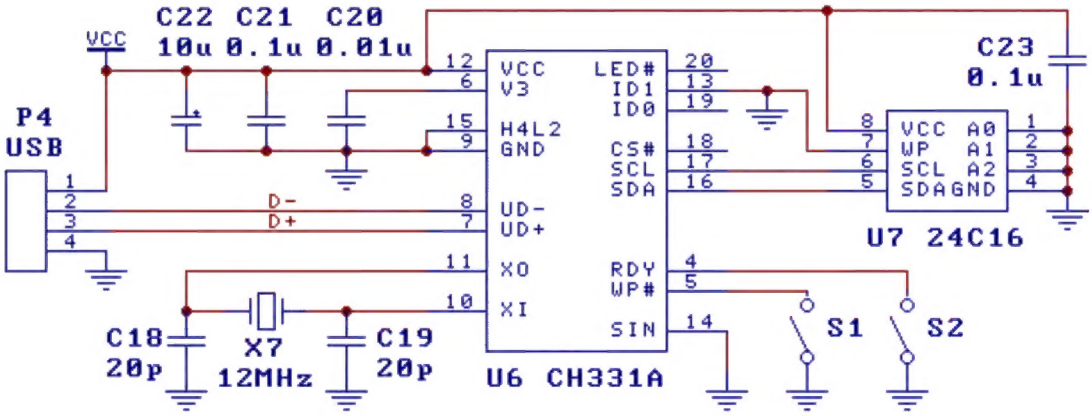
In the figure, S1 is the write protection switch of the USB flash disk, and S2 is the memory ready status switch, which can be selected as required.